OF070KAN

◎ Feature

Item	Info.
Resolution	1024*600
Power supply	3.3V
Interface	LVDS
IC	HX8282A11+HX8696
View Direction	ALL
Touch Panel	-

◎ Mechanical Data (unit: mm)

Item	Dimension
Module dimension	164.8 x 99.8
View area	156.7 x 89.1
Active area	154.21 x 85.92
Pixel size	0.1506 x 0.1432

◎ Electronical Characteristics (unit: V)

Item	Min	Typ	Max
Supply Voltage (VDD)	3.0	3.3	3.6
Voltage for Backlight	-	9.3	-

◎Temperature Range (unit: ℃)

Item	Min	Typ	Max
Operating Temp.	-20		70
Storage Temp.	-30		80

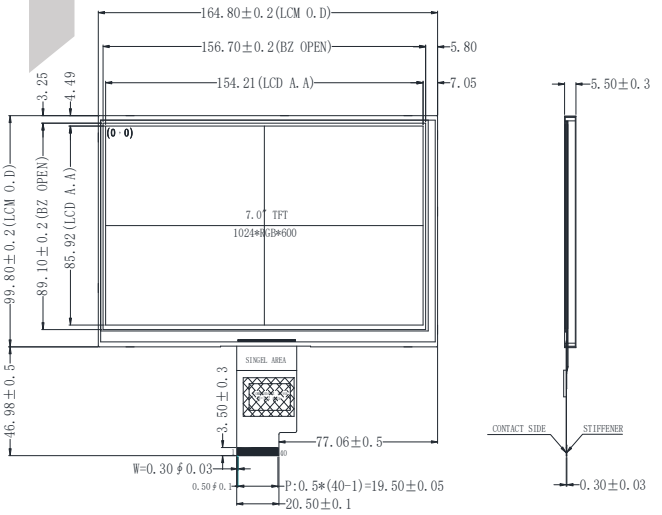

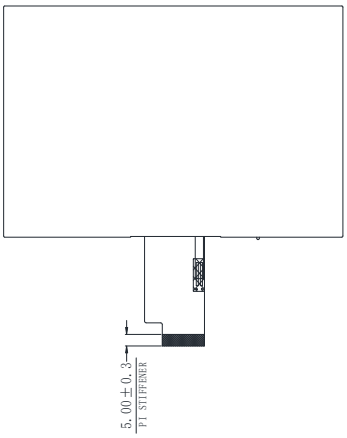

PIN NO	SYMBOL	PIN NO	SYMBOL
1	VCOM	21	PIND3
2	DVDD	22	GND
3	DVDD	23	NC
4	NC	24	NC
5	RESET	25	GND
6	STBYB	26	NC
7	GND	27	NC
8	NIND0	28	SELB
9	PIND0	29	AVDD
10	GND	30	GND
11	NIND1	31	LED-
12	PIND1	32	LED-
13	GND	33	SHLR
14	NIND2	34	UPDN
15	PIND2	35	VGL
16	GND	36	NC
17	NINC	37	NC
18	PINC	38	VGH
19	GND	39	LED+
20	NIND3	40	LED+